ELECTRICAL SPECIFICATIONS

PART 1 - GENERAL

1.01 COORDINATION OF TRADES: SCHEDULE AND COORDINATE WORK WITH THAT OF OTHER DIVISIONS AND SECTIONS.
1.02 GUARANTEE IN WRITING THE ELECTRICAL INSTALLATION, AND ALL WORK UNDER THIS SECTION, FOR A PERIOD OF ONE YEAR FROM THE DATE OF FINAL ACCEPTANCE BY THE OWNER AGAINST ALL EVIDENCE OF IMPERFECT WORKMANSHIP OR FAILURE OR MALFUNCTION OF MATERIALS.

PART 2 - PRODUCTS

2.01 MATERIALS AND EQUIPMENT
A. MATERIAL FURNISHED UNDER THIS CONTRACT, UNLESS OTHERWISE NOTED, SHALL BE NEW, FREE FROM DEFECTS AND SHALL CONFORM WITH THE STANDARDS OF UL.
B. VOLTAGE, AMPERE, AND OTHER RATINGS OF EQUIPMENT SHALL BE SUITABLE FOR USE INTENDED. DISCONNECT SWITCHES SHALL BE PROPERLY HORSEPOWER RATED AND SUITABLE FOR VOLTAGE, AND AMPERE RATING OF LOAD
C. THE DRAWINGS GENERALLY INDICATE THE RACEWAY SIZE, THE NUMBER, SIZE, AND INSULATION TYPE OF CONDUCTORS TO BE PROVIDED AND INSTALLED. WHERE THESE ITEMS DO NOT MEET MINIMUM APPLICABLE CODES, FOR EQUIPMENT BEING SERVED, COMPLY AS REQUIRED AT NO ADDITIONAL COST.
2.02 RACEWAYS
A. GALVANIZED RIGID CONDUIT (GRC); INCLUDING ELBOWS AND COUPLINGS.
B. INTERMEDIATE METAL CONDUIT (IMC); INCLUDING ELBOWS AND COUPLINGS.
C. ELECTRIC METALLIC TUBING (EMT) WITH FITTINGS OF PRESSED STEEL OR MALLEABLE IRON, COMPRESSION TYPE WITH INSULATED THROATS.
D. RIGID NON-METALLIC CONDUIT: (PVC) U.L. LABELED SCHEDULE 40 P.V.C.
2.03 DEVICE AND JUNCTION BOXES: INCLUDE PLASTER RINGS, COVERS, AND KO SEALS AS REQUIRED.
2.04 WIRE AND CABLE: UNLESS OTHERWISE NOTED, WIRE AND CABLE SHALL BE SOFT DRAWN, ANNEALED COPPER. WIRE SIZES NO. 8 AND LARGER AND CONDUCTORS SERVING MOTORS AND SUBJECT TO VIBRATIONS SHALL BE STRANDED CABLE. INSULATION TO BE THWN/THHN, JACKETED 90C INSULATED WIRE. PROVIDE WIRE COLOR IDENTIFICATION: NEUTRAL WIRE - WHITE, LIVE WIRE - BLACK, RED, BLUE ON 120/208 VOLT SYSTEM; NEUTRAL WIRE - GREY, LIVE WIRE - BROWN, ORANGE YELLOW ON 277/480 VOLT SYSTEM; GROUND - GREEN.
2.05 ADDED PANELS TO BE PANELBOARDS - LOAD CENTERS ARE NOT ACCEPTABLE UNLESS SPECIFICALLY APPROVED.
2.06 SERVICE ENTRANCE AND DISTRIBUTION GEAR BY G.E., SQUARE "D", CUTLER HAMMER/SIEMENS ONLY. INTERIOR PANELBOARDS SHALL BE RECESSED WITH FLANGED/REMOVABLE SCREW-ON COVER. SURFACE MOUNTED PANELBOARDS OR HINGED/FLUSH COVERS NOT ALLOWED.
2.07 SWITCHBOARDS: COPPER BUSSING WITH FULL CAPACITY NEUTRAL. ALUMINUM ALLOWED WHEN APPROVED BY ARCHITECT.
2.11 120/208 VOLT AND 277/480 VOLT PANELBOARDS: 3 PHASE, 4 WIRE, COPPER BUS, COMPOSED OF AN ASSEMBLY OF BOLT-IN-PLACE MOLDED CASE CIRCUIT BREAKERS WITH THERMAL AND MAGNETIC TRIP AND TRIP FREE POSITION SEPARATE FROM EITHER ON OR OFF POSITIONS.
2.13 SAFETY SWITCHES: FUSED, HEAVY DUTY, HORSEPOWER RATED.
2.14 STARTERS, CONTACTORS AND CONTROL DEVICES: PROVIDE AS SHOWN AND AS REQUIRED BY CODE. FURNISH COMPLETE WITH PILOT LIGHTS, AUXILIARY CONTACTS, PUSH BUTTONS, HAND-OFF-ON SWITCHES, CONTROL DEVICES, AND OVERLOAD RELAYS. THERMAL OVERLOADS TO BE SIZED PER MANUFACTURERS RECOMMENDATIONS. AMBIENT COMPENSATE ALL HEATERS EXPOSED TO HIGH TEMPERATURE OR INSTALLATION OUTSIDE.
2.16 NAMEPLATES: PROVIDE BLACK LAMICOID NAMEPLATES WITH 3/16" HIGH WHITE ENGRAVED LETTERS ON PANELS, SWITCHBOARDS, MAINS AND SUBMAINS, DISTRIBUTION EQUIPMENT, REMOTE SAFETY SWITCHES, CIRCUIT BREAKERS, TIME SWITCHES, CONTACTORS, AND STARTERS.
2.17 WIRING DEVICES
A. HUBBELL OR COMPARABLE LEVITON OR BRYANT: WHITE AND GREY IN COLOR - AS NOTED ON DRAWINGS. 15 AMP DEVICES ALLOWED ONLY WHEN SPECIFICALLY DENOTED ON ELECTRICAL CONSTRUCTION DRAWINGS.
B. TOGGLE SWITCHES: SINGLE POLE - HUBBELL 1221- 20A, 120/277V, THREE WAY - HUBBELL 1223- 20A, 120/277V, FOUR WAY - HUBBELL 1224- 20A, 120/277V.
C. RECEPTACLES: DUPLEX GROUNDING TYPE, SPECIFICATION GRADE, 125 VOLT, 20 AMPERES, SINGLE PHASE, HUBBELL NO. 5262 OR COMPARABLE.
D. GROUND FAULT INTERRUPTER TYPE RECEPTACLE: DUPLEX GROUNDING TYPE, SPECIFICATION GRADE, 125 VOLT, 20 AMPERES, SINGLE PHASE, 5 mA GROUND TRIP, FEED THROUGH CONSTRUCTION.
2.18 DEVICE PLATES: LEXAN (STA-KLEEN), SMOOTH FINISH IN STAINLESS STEEL AND WHITE - AS NOTED ON PLANS. MULTI-GANG OUTLET PLATES SHALL BE USED FOR MULTI-GANG BOXES.
2.19 NOT USED.
2.20 LIGHTING FIXTURES
A. PROVIDE FIXTURES PER SCHEDULE WITH ALL PARTS INCLUDING PLASTER FRAMES FOR RECESSED FIXTURES AND FITTINGS NECESSARY TO COMPLETELY AND PROPERLY INSTALL FIXTURES.
B. LAMPS: INCANDESCENT LAMPS BY G.E., SYLVANIA, OR WESTINGHOUSE, 130 VOLT, EXTENDED LIFE LAMPS. FLUORESCENT LAMPS BY G.E., SYLVANIA, PHILLIPS, OR WESTINGHOUSE. MINIMUM CRI OF 80. WATTAGE AND TYPES AS REQUIRED BY FIXTURE.

PART 3 - EXECUTION

3.01 GENERAL INSTALLATION
A. THE ENTIRE ELECTRICAL INSTALLATION SHALL BE MADE IN A NEAT, APPROVED, FINISHED, AND SAFE MANNER.
B. INSPECT AND MAKE TIGHT ALL CONNECTIONS FOR ALL EQUIPMENT, INCLUDING FACTORY CONNECTIONS. TORQUE ALL CONNECTIONS PER MANUFACTURER'S RECOMMENDATIONS.
C. LIGHTING FIXTURES INSTALLED AND USED FOR LIGHTING DURING CONSTRUCTION SHALL BE RELAMPED WITH NEW LAMPS JUST PRIOR TO FINAL ACCEPTANCE OF THE PROJECT.
D. INSTALL SEISMIC RESTRAINT DEVICES FOR ALL CEILING MOUNTED EQUIPMENT, I.E. FLUORESCENT LAY-IN FIXTURES. PROVIDE GRID CLIPS AND #12 SLACK WIRES FROM FIXTURE CORNERS TO STRUCTURE.
3.02 RACEWAYS
A. INSTALL COMPLETE RACEWAY SYSTEMS FOR ALL ELECTRICAL CONDUCTORS INCLUDING TELEPHONE, SIGNAL, CONTROL, AND OTHER SYSTEMS.
B. UNLESS OTHERWISE NOTED, INSTALL ALL RACEWAYS CONCEALED. WHERE IT IS NOT FEASIBLE TO CONCEAL RACEWAYS, INSTALL AS DIRECTED BY ARCHITECT.
C. INSTALL EXPOSED RACEWAYS TO RUN PARALLEL OR AT RIGHT ANGLES TO STRUCTURAL BUILDING LINES WITH NEAT BENDS AND NEATLY OFFSET INTO TERMINATIONS.
D. IN EMPTY RACEWAY PROVIDE AND INSTALL A NO. 14 NYLON DRAG LINE.
E. INSTALL RACEWAYS WITH APPROVED HEAVY DUTY SUPPORTS, STRAPS, HANGERS, CONNECTORS, AND COUPLINGS AS REQUIRED TO MAINTAIN AN APPROVED INSTALLATION.
F. DO NOT INSTALL CONDUIT RACEWAYS IN CONCRETE SLABS.
H. MINIMUM CONDUIT SIZE TO BE 3/4" U.N.O.
3.03 GALVANIZED RIGID CONDUIT (GRC) ALL RACEWAYS SHALL BE GRC EXCEPT AS NOTED OR SHOWN. CONDUIT, ELBOWS, STANDARD COUPLINGS SHALL BE HOT DIPPED GALVANIZED RIGID STEEL. IF PARTITIONS OR WALLS ARE SOLID CONCRETE OR ARE GROUTED SOLID WITH CONCRETE OR MORTAR, RIGID STEEL CONDUIT SHALL BE USED.
3.04 INTERMEDIATE METAL CONDUIT (IMC) IMC RACEWAY AND APPROVED FITTINGS WHERE PERMITTED BY APPLICABLE CODES AND REGULATIONS MAY BE USED IN LIEU OF RIGID STEEL CONDUIT, WHERE INSTALLED ABOVE FINISH GRADE AND ABOVE CONCRETE SLABS ON GRADE.
3.05 ELECTRIC METALLIC TUBING (EMT) EMT MAY BE USED WHERE CONCEALED IN AREAS ABOVE CEILINGS, FURRED SPACES, PARTITIONS OR WALLS. ALSO MAY BE EXPOSED, WHEN NOT IN HAZARDOUS AREAS, AREAS SUBJECT TO PHYSICAL DAMAGE, OR WHEN DIRECTLY EXPOSED TO RAIN OR WASH-DOWN.
3.06 FLEXIBLE METAL CONDUIT (FLEX) USE FLEXIBLE CONDUITS FOR CONNECTIONS TO MOTORS, WHERE SUBJECT TO MOVEMENT OR VIBRATION, AND LIQUID TIGHT WHERE EXPOSED TO MOISTURE OR OIL.
3.07 RIGID NONMETALLIC CONDUIT PVC SCHEDULE 40 MAY BE INSTALLED FOR DIRECT BURIAL RACEWAYS WHERE INSTALLED WITH MINIMUM COVERAGE PER NEC TABLE 300-5.
3.08 OUTLET, PULL AND JUNCTION BOXES
A. UNLESS OTHERWISE SHOWN OR AS DIRECTED PRIOR TO INSTALLATION, OUTLET BOXES SHALL GENERALLY BE PLACED AT THE FOLLOWING HEIGHTS, CENTER OF BOX TO FINISHED FLOOR LEVEL.
B. WALL SWITCHES: 44".
C. CONVENIENCE RECEPTACLES: 18" (OR 4" ABOVE COUNTERS) AND/OR AS NOTED. (SIMILAR TYPE OUTLETS SHALL BE MOUNTED AT SAME HEIGHT IN EACH AREA). GROUNDING PIN AT TOP.
3.09 CONDUCTORS (COPPER ONLY)
A. USE SPECIFIED COLOR SCHEDULE FOR ALL WIRING. WHERE LARGE CONDUCTORS ARE NOT AVAILABLE IN COLORS, IDENTIFY WITH PERMANENT COLORED TAPE AT ALL TERMINATIONS, JUNCTION BOXES, ETC. COLOR CODING PER NEC.
B. MAKE TAPS, JOINTS, SPLICES, AND OTHER CONNECTIONS WITH FIXTURE CONNECTORS.
C. DO NOT INSTALL WIRING OR PULL WIRES, IN RACEWAYS UNTIL RACEWAY SYSTEM IS COMPLETE, CLEAN AND DRY AND FREE OF ALL FOREIGN MATERIALS. LUBRICATE AS REQUIRED WITH SPECIFIED LUBRICANT.
D. MINIMUM CONDUCTOR SIZE TO BE #12 CU. THWN.
3.10 LIGHTING FIXTURES
A. LEAVE FIXTURES AND LAMPS CLEAN OF ALL DIRT, DUST, GREASE SPOTS AND DEBRIS AND ALL GLASS, PLASTIC AND OTHER COMPONENTS, UNSCRATCHED AND UNBROKEN.
B. FIT AND ADJUST ALL FIXTURES. WHERE STRUCTURAL CONDITIONS, PARTITIONS, FURNITURE, SHELVING, AND AIR CONDITIONING DIFFUSERS INTERFERE WITH THE LIGHTING FIXTURES AT LOCATIONS SHOWN, NOTIFY ARCHITECT IN WRITING AND RELOCATE AT NO ADDITIONAL COST AS DIRECTED.
C. FIXTURES WITH FINISH TRIM OR LENS FRAMES SHALL BE GASKETED AND BAFFLED TO PREVENT LIGHT LEAKS. INSTALL SO THAT NO LIGHT LEAKS EXIST. D. FIXTURES MOUNTED DIRECTLY ON COMBUSTIBLE LOW-DENSITY CEILINGS SHALL BE UL APPROVAL FOR THIS CONDITION AND BE PLAINLY MARKED SO INDICATING.
3.11 GROUNDING
A. GROUNDING FOR DISTRIBUTION EQUIPMENT, EQUIPMENT AND MATERIALS WITH ELECTRICAL CONNECTIONS, ELECTRIC MOTOR FRAMES, ELECTRIC RACEWAY AND RELATED EQUIPMENT, SHALL BE EFFECTIVELY AND PERMANENTLY GROUNDED IN ACCORDANCE WITH PERTINENT SECTIONS OF ARTICLE 250 OF NEC. RESISTANCE TO GROUND SHALL NOT EXCEED 10 OHMS.
B. ALL RACEWAYS SHALL HAVE AN APPROVED SIZED, INSULATED, STRANDED COPPER GROUNDING TYPE CONDUCTOR.
C. WHERE RACEWAYS CONNECT TO A CONCENTRIC K.O. PROVIDE GROUNDING LOCKNUT OR BUSHING AND BOND WIRE EXTENDED AND BONDED TO ENCLOSURE, SIZE AS PER NEC.
3.12 DITCHING, EXCAVATION AND BACKFILLING: PERFORM ALL DITCHING, EXCAVATION AND BACKFILLING REQUIRED FOR THE ELECTRICAL WORK. PROVIDE AND MAINTAIN ALL SHEATHING, BRACING AND PROPER GUARDS FOR PREVENTION OF ACCIDENTS.
3.13 UTILITY COMPANY SERVICE CONTRACTOR TO BE RESPONSIBLE FOR COORDINATING AND PROVIDING REQUIRED WORK FOR SUPPLYING ELECTRICAL POWER AND COMMUNICATIONS UTILITIES TO THE PROJECT.
3.14 FINAL INSPECTION TESTS TEST SYSTEM FOR SHORTS AND GROUNDS. FAULTY WIRING SHALL BE REMOVED AND REPLACED. AFTER SYSTEM IS CONNECTED COMPLETE, TEST FOR INSULATION RESISTANCE. RESISTANCE LOWER THAN OUTLINED IN THE NEC, MANUFACTURER'S DATA, ETC., SHALL BE REMOVED AND REPLACED. ANY DEVICE, APPARATUS OR FIXTURE UNDER THIS CONTRACT SHOWING SUBSTANDARD READINGS SHALL BE REMOVED AND REPLACED AS DIRECTED BY THE ARCHITECT.
3.15 LABEL ALL RECEPTACLES WITH 3/16" HIGH BLACK LETTERING ON CLEAR TAPE. IF THE RECEPTACLE IS BLACK OR BROWN, PROVIDE WHITE LETTERING ON CLEAR TAPE. LABEL TO BE NEATLY CENTERED IN THE TOP SPACE OF THE COVERPLATE, AND INDICATE THE SERVING PANEL AND CIRCUIT ORIGIN.

GENERAL NOTES

1. THE ELECTRICAL DRAWINGS, SPECIFICATIONS AND GENERAL NOTES DESCRIBE THE RECOMMENDED SCOPE OF WORK AND THE DOCUMENTS SHALL BE USED FOR THE PURPOSE OF BIDDING, BUILDING DEPARTMENT REVIEW, AND TO SECURE THE NECESSARY CONSTRUCTION PERMIT ONLY.

2. BRANCH CONTROL CIRCUITING AND WIRE COUNT MAY NOT BE INDICATED ON THESE PLANS. CONTRACTOR IS RESPONSIBLE TO COMPLETE THE BRANCH CIRCUIT WIRING IN ACCORDANCE WITH PLAN NOTES AND AS PERMITTED BY AUTHORITY. CONTRACTOR SHALL SUBMIT AS-BUILT DRAWINGS AS A PART OF RECORD DRAWING SUBMITTAL TO ARCHITECT AND AUTHORITY HAVING JURISDICTION (AHJ).

3. ELECTRICAL INSTALLATION SHALL COMPLY WITH THE LOCALLY ADOPTED, AS NATIONAL ELECTRICAL CODE ADAPTED BY THE JURISDICTION AND ANY LOCAL SUPPLEMENTS.

4. ALL EQUIPMENT SHOWN IS NEW, CONTRACTOR FURNISHED AND INSTALLED, UNLESS OTHERWISE NOTED. IF CONTRACTOR PROPOSED TO SUBSTITUTE SPECIFIC EQUIPMENT SPECIFIED, HE SHALL SUBMIT HIS REQUEST FOR CONSIDERATION TO THE OWNER AND ENGINEER PRIOR TO THE BID IN WRITING. ALL SUBSTITUTIONS MUST BE REVIEWED BY THE ENGINEER. SUCH REVIEW SHALL NOT RELIEVE THE CONTRACTOR FROM COMPLYING WITH THE REQUIREMENTS OF THE DRAWINGS AND SPECIFICATIONS. THE CONTRACTOR SHALL BE RESPONSIBLE AT HIS OWN EXPENSE FOR ANY CHANGE RESULTING FROM HIS PROPOSED SUBSTITUTIONS WHICH AFFECT OTHER PARTS OF HIS OWN WORK, OR SUBSTITUTIONS WHICH AFFECT OTHER PARTS OF HIS OWN WORK OR THE WORK OF OTHER CONTRACTORS.

5. THE ELECTRICAL DRAWINGS, CONDUIT RUNS, WIRING AND ELECTRICAL INFORMATION ARE DIAGRAMMATIC ONLY. DO NOT SCALE THE ELECTRICAL DRAWINGS TO DETERMINE THE LOCATION OF EQUIPMENT OR OUTLETS.

6. REFER TO THE ARCHITECTURAL REFLECTED CEILING PLAN FOR EXACT LOCATIONS OF ALL LIGHTING FIXTURES, CEILING MOUNTED OUTLETS AND EQUIPMENT.

7. ALL DEVICE MOUNTING HEIGHTS AND EXACT LOCATIONS SHALL BE COORDINATED WITH ARCHITECTURAL DRAWINGS AND ELEVATIONS PRIOR TO ROUGH-IN.

8. IT SHALL BE THE CONTRACTOR'S RESPONSIBILITY TO VERIFY TYPES OF CEILING SYSTEM. FIXTURES LOCATED IN DAMP OR WET LOCATIONS SHALL BE LISTED AND LABELED FOR USE IN SUCH LOCATIONS.

9. ALL RECESSED LIGHTING FIXTURES, PANELBOARDS, SWITCHES, ETC., MOUNTED IN FIRE RATED STRUCTURES SHALL BE ENCLOSED WITH AN APPROVED ENCLOSURE CARRYING THE SAME FIRE RATING AS THE STRUCTURE.

10. PORTIONS OF THE CEILING SYSTEMS MAY BE INACCESSIBLE, THEREFORE, THE CONTRACTOR SHALL STRATEGICALLY LOCATE ACCESS BOXES, ETC., WHICH SHALL BE READILY ACCESSIBLE. ALL LIGHTING FIXTURE WIRING, BALLASTS, J-BOXES, ETC. SHALL BE ACCESSIBLE FROM FIXTURE OPENING.

11. ALL WIRING AND ELECTRICAL EQUIPMENT INSTALLED FOR MECHANICAL AND PLUMBING EQUIPMENT SHALL BE IN ACCORDANCE WITH MECHANICAL AND PLUMBING SPECIFICATIONS AND ASSOCIATED DRAWINGS. CONTRACTOR SHOULD OBTAIN THE REQUIRED MECHANICAL AND PLUMBING DRAWINGS AND PROVIDE ALL EQUIPMENT, RACEWAYS, WIRING, ETC., AS INDICATED THEREON AS PROVIDED UNDER THE ELECTRICAL WORK.

12. ALL FINAL CONNECTIONS TO OWNER FURNISHED EQUIPMENT SHALL BE MADE BY THE CONTRACTOR, UNLESS OTHERWISE NOTED. VERIFY ELECTRICAL CHARACTERISTICS AND U.L. LISTING PRIOR TO CONNECTION.

13. THE CONTRACTOR SHALL VERIFY THE LOAD INPUT VOLTAGE OF ALL EQUIPMENT PRIOR TO INSTALLATION. ACCEPTING ANY EQUIPMENT RESULTING IN A LOAD INCREASE SHALL BE THE RESPONSIBILITY OF CONTRACTOR.

14. ELECTRICAL OUTLETS ON OPPOSITE SIDES OF FIRE RATED WALLS AND PARTITIONS MUST BE SEPARATED BY DISTANCE OF 24 IN. HORIZONTALLY, IN ACCORDANCE WITH I.B.C. SEC. 711.3.2. OPENINGS IN FIRE RATED WALLS GREATER THAN 16 SQ. IN. MUST BE FIRE STOPPED.

15. PROVIDE AN ADDITIONAL JUNCTION BOX (SIZE AS REQUIRED) WHERE THE NUMBER OF CONDUCTORS EXCEEDS THE MAXIMUM ALLOWED FOR A GIVEN JUNCTION POINT OR OUTLET.

16. CONDUCTORS SHALL BE COPPER THHN/THWN 600 VOLT INSULATION UNLESS OTHERWISE NOTED. USE PROPER TEMPERATURE RATING OF CONDUCTORS BASED ON THE AMBIENT AIR TEMPERATURE WHERE CONDUCTORS ARE BEING USED. HIGHER AMPACITY CONDUCTOR AND LARGER RACEWAY SHALL BE PROVIDED TO OFFSET THE AMPACITY CORRECTION FACTORS AS INDICATED IN NEC TABLE 310 AND ELSEWHERE IN CODE.

17. ALL FLUORESCENT BALLASTS AND LAMPS SHALL BE CALIFORNIA ENERGY COMMISSION(CEC) CERTIFIED ENERGY SAVING TYPE.

18. DO ALL DRILLING, CUTTING, CHANNELING AS REQUIRED FOR ELECTRICAL WORK AND INDICATED OR HEREIN SPECIFIED. ALL HOLES, CURBS, ETC., IN FLOORS, CEILINGS AND WALLS SHALL BE PATCHED, UNLESS INDICATED OTHERWISE. PAINT ALL EXPOSED ELECTRICAL RACEWAYS, CABINETS, ENCLOSURES AND FITTING TO MATCH IN COLOR TO ADJACENT SURFACES IN FINISHED AREAS. (PROTECT UL LISTINGS LABELS FROM PAINT).

19. SEAL ALL PENETRATIONS THROUGH FIRE RATED WALLS, CEILINGS, FLOORS, ETC., TO MAINTAIN THE FIRE RATING. FURNISH AND INSTALL FIRE RATED ENCLOSURE FOR ALL EQUIPMENT PENETRATING INTO FIRE RATED ENVELOPS, SPACES ETC.

20. EMERGENCY LIGHTING SHALL BE PROVIDED PER U.B.C. AND SHALL BE DESIGNED TO PROVIDE MINIMUM REQUIRED FOOTCANDLES AND LUMENS. PROVIDE ADDITIONAL EMERGENCY ILLUMINATION AS REQUIRED BY INSPECTION AUTHORITIES HAVING JURISDICTIONS.

21. ALL ELECTRICAL EQUIPMENT SHALL BE BRACED OR ANCHORED TO RESIST A HORIZONTAL FORCE ACTING IN ANY DIRECTION USING THE FOLLOWING CRITERIA. [NON HEALTH CARE FACILITY INCLUDE OSHPD NOTES FOR HEALTH CARE FACILITY]

FIXED EQUIPMENT ON GRADE:	33% OF OPERATING WEIGHT
FIXED EQUIPMENT ON STRUCTURE:	50% OF OPERATING WEIGHT
EMERGENCY POWER & COMMUNICATION & EQUIPMENT ON GRADE:	50% OF OPERATING WEIGHT
EMERGENCY POWER & COMMUNICATION ON STRUCTURE:	75% OF OPERATING WEIGHT

FOR FLEXIBLE MOUNTED EQUIPMENT USE 2 X THE ABOVE VALUES.
SIMULTANEOUS VERTICAL FORCE - USE 1/3 X HORIZONTAL FORCE.

CONDUIT, BUSDUCT, CABLE TRAY, WIREWAYS, ETC., SHALL BE BRACED IN ACCORDANCE WITH "GUIDELINES", PUBLISHED BY SMACNA AND PPIC.

NOTICE
THESE DRAWINGS ARE SUBJECT TO AN APPROVAL OF THE BUILDING DEPARTMENT, FIRE MARSHAL, UTILITY COMPANY AND OTHER AGENCIES AUTHORITY HAVING JURISDICTION (AHJ). BY THE ACT OF SUBMITTING A BID PROPOSAL FOR WORK, THE CONTRACTOR HAS REVIEWED THE PLANS THOROUGHLY AND ACCEPT FULL RESPONSIBILITY OF PLAN CORRECTIONS AND ASSOCIATED CONSTRUCTION COSTS REQUIRED BY AHJ.

FIELD VERIFICATION:

1. WITHIN TEN (10) BUSINESS DAYS OF "NOTICE TO PROCEED" THE CONTRACTOR SHALL FIELD VERIFY EXISTING ELECTRICAL CONDITIONS IN THE PROPOSED PROJECT AREA.
2. THE CONTRACTOR SHALL NOTIFY BASE ENGINEERING AND THE ARCHITECT OF ALL DEVIATIONS FROM THESE PLANS WITHIN FIFTEEN (15) BUSINESS DAYS.
3. THE CONTRACTOR SHALL PROVIDE TIMELY ASSISTANCE IN PROVIDING FIELD INFORMATION TO THE ENGINEER FOR DESIGN CHANGES TO ADDRESS ANY REQUIRED FIELD CHANGES.

MC CABLE SHALL NOT BE USED. PREWIRED MC CABLE WHIPS FROM LIGHTING FIXTURES ARE ACCEPTABLE WHEN SUPPLIED WITH THE FIXTURE AND NO LONGER THAN 72".

ELECTRICIAN TO PROVIDE STAINLESS STEEL COVER PLATES FOR ALL LOW VOLTAGE JUNCTION BOXES.

NO UNDER SLAB ELECTRICAL WORK ALLOWED UNLESS OTHERWISE NOTED ON PLAN.

ELECTRICAL SYMBOLS LIST

NOTE: ALL DIMENSIONS GIVEN ARE TO DEVICE CENTERLINES. CONTRACTOR TO COORDINATE ALL INSTALLATIONS.

POWER DISTRIBUTION

- S_M SINGLE-POLE SWITCH, MANUAL MOTOR STARTER
- J-BOX (WITH FLEX CONNECTION TO EQUIPMENT.)
- DISCONNECT SWITCH, WITH RATING AS SHOWN ON PLANS
- COMBINATION DISCONNECT SWITCH / MOTOR STARTER FURNISHED BY ELECTRICAL CONTRACTOR.
- BRANCH CIRCUITRY CONCEALED IN WALL OR CEILING WITH ADDITIONAL #12 INSULATED GND. U.N.O. HATCHES INDICATE NUMBER OF CURRENT CARRYING CONDUCTORS. 'X' INDICATES ADDITIONAL INSULATED, ISOLATED GROUND CONDUCTORS.
- BRANCH CIRCUITRY HOMERUN TO PANEL AS NOTED ON PLANS
- INDICATES EXTERIOR UNDERGROUND WIRE RUNS.

LIGHTING & LIGHTING CONTROLS

- L1 LIGHTING FIXTURE. SUBSCRIPT LETTER DENOTES FIXTURE TYPE AS DESCRIBED IN LIGHT FIXTURE SCHEDULE.
- S_a SINGLE-POLE SWITCH @ 44" A.F.F. U.N.O. LOWER CASE LETTER DENOTES FIXTURE CONTROL. 300V. 20A.
- S_2 TWO-POLE SWITCH @ 44" A.F.F. U.N.O. LOWER CASE LETTER DENOTES FIXTURE CONTROL. 300V. 20A.
- S_P SINGLE-POLE LIGHT SWITCH WITH PILOT LIGHT @ 44" A.F.F. U.N.O. 300V. 20A.
- S OCCUPANCY SENSOR SWITCH WITH OFF CONTROL, AND ADJUSTABLE SETTINGS FOR TIME OFF DELAY, FOOTCANDLE LEVEL, AND MASKING. WATTSTOPPER OR EQUAL. MOUNT AT 44" A.F.F. U.N.O. USE PW-100 FOR OFFICES/CONF/ETC., WI-200 FOR CLASSROOMS/LARGE ROOMS/ETC.
- CEILING MOUNT DUAL TECHNOLOGY ULTRASONIC / P.I.R. MOTION SENSOR TO CONTROL POWER TO ROOM SWITCHES - WATTSTOPPER #DT-300 (WITH POWER PACK) OR EQUAL.

RECEPTACLES & COMMUNICATIONS OUTLETS

- DUPLEX CONVENIENCE OUTLET, 20A, 125V, MTD @ 18" A.F.F. U.N.O.
- SIMPLEX CONVENIENCE OUTLET, 20A, 125V, MTD @ 18" A.F.F. U.N.O.
- DUPLEX CONVENIENCE OUTLET MOUNTED 3" ABOVE COUNTERTOP BACKSPLASH OR APPROXIMATELY 44" A.F.F.
- GFCI DUPLEX CONVENIENCE OUTLET, 20A, 125V, 5 mA TRIP, MTD @ 18" A.F.F. U.N.O.
- GFCI DUPLEX CONVENIENCE OUTLET MOUNTED 3" ABOVE COUNTERTOP BACKSPLASH OR APPROXIMATELY 44" A.F.F.
- TELEPHONE OUTLET. PROVIDE FLUSH J-BOX @ + 18" AFF U.N.O W/ 1" CONDUIT W/ PULL WIRE TO MANAGER'S STATION. 'w' SUBSCRIPT INDICATES WALL PHONE AT 54" AFF.
- DATA OUTLET. PROVIDE FLUSH J-BOX @ + 18" A.F.F. U.N.O W/ 1" CONDUIT WITH PULL WIRE TO MANAGER'S STATION.
- COMBINATION TEL/DATA OUTLET. PROVIDE FLUSH J-BOX @ + 18" AFF U.N.O W/ 1" CONDUIT WITH PULL WIRE TO MANAGER'S STATION.
- T.V. SYSTEM DATA OUTLET. PROVIDE FLUSH J-BOX @ + 18" A.F.F. U.N.O W/ 1" CONDUIT WITH PULL WIRE TO MANAGER'S STATION. WHEN SHOWN ADJACENT RECEPTACLE, MOUNT AT RECEPTACLE HEIGHT. REFER TO RECEPTACLE FOR MOUNTING HEIGHT.
- SPECIAL PURPOSE RECEPTACLE MTD. @ 18" A.F.F. U.N.O., AMPERAGE AND PHASE AS NOTED ON PLANS, NEMA CONFIGURATION AS REQ'D.
- ISOLATED GROUND DUPLEX CONVENIENCE OUTLET (ORANGE), 20A.,125V., MTD @ +18" A.F.F.
- DOUBLE DUPLEX CONVENIENCE OUTLETS UNDER COMMON COVER
- ISOLATED DOUBLE DUPLEX CONVENIENCE OUTLETS (ORANGE) 20A.,125V.
- SPK SPEAKER

ABBREVIATIONS

A	AMPERES	M.C.B.	MAIN CIRCUIT BREAKER
AL	ALUMINUM	M.L.O.	MAIN LUGS ONLY
A.F.F.	ABOVE FINISHED FLOOR	MTD.	MOUNTED
A.F.G.	ABOVE FINISHED GRADE	P.	POLE
C.	CONDUIT	SW.	SWITCH
C/B	CIRCUIT BREAKER	T.M.B.	TELEPHONE MOUNTING BOARD
CU.	COPPER	TYP.	TYPICAL
DISC.	DISCONNECT	U.N.O.	UNLESS NOTED OTHERWISE
F.	FUSE	V.	VOLTS
GFI	GROUND FAULT CURRENT INTERRUPTER	W.	WIRE
		W.P.	WEATHERPROOF
GND.	GROUND	XFMR	TRANSFORMER
H.P.	HORSE POWER	Ø	PHASE
k	1000		

PANDA RESTAURANT GROUP INC.
1683 Walnut Grove Ave.
Rosemead, California
91770
Telephone: 626.799.9898
Facsimile: 626.372.8288

All ideas, designs, arrangement and plans indicated or represented by this drawing are the property of Panda Express Inc. and were created for use on this specific project. None of these ideas, designs, arrangements or plans may be used by or disclosed to any person, firm, or corporation without the written permission of Panda Express Inc.

REVISIONS:

1	PLAN REVIEW COMMENTS	01/14/2022

ISSUE DATE:

1	95% SUBMITTAL	11/19/2021
2	100% SUBMITTAL	01/14/2022

DRAWN BY:JMJ

PANDA PROJECT #:
ARCH PROJECT #:

MARSHALL & BOLLWERK ENGINEERING, INC.
8881 Highway 92, Suite 400
Woodstock, Ga. 30189
p: (678) 795-0333, f: (678) 325-4559
e: mbe@mbeinc.net

GEORGIA REGISTERED NO. 30016 PROFESSIONAL ENGINEER MICHAEL JONES 11-15-2021

BID SET (NOT FOR CONSTRUCTION) DATE: 2022/01/18

PANDA EXPRESS
SPACE 8126
EXCHANGE FOOD COURT
FT LEONARD WOOD, MO

E-000
ELECTRICAL SYMBOLS
SPECIFICATIONS, NOTES

LIGHTING FIXTURE SCHEDULE

PROVIDED FOR INFORMATION ONLY.
VERIFY AND INSTALL PER ELECTRICAL DRAWING

[THIS INFORMATION WAS PROVIDED BY THE OWNER & THE CONTRACTOR SHALL COORDINATE w/ THE PANDA EXPRESS CONSTRUCTION MANAGER ANY CONFLICTS WITH MODEL NUMBERS OR AVAILABILITY.]

ITEM	SYMBOL	DESCRIPTION	QTY.	MFR. & CAT. NO.	REMARK
INTERIOR LIGHTING ITEM					
L1	L1	EDGE-LIT LED PANEL 120-277V UE - UNIVERSAL VOLTAGE	2	MANUFACTURER: LSI FIXTURE: SPF24-LED-50-UE-DIM-35 LED 5000 LUMENS, 3500K COLOR	KITCHEN CEILING LIGHTS. FURNISHED BY LICENSEE / INSTALLED BY G.C.
L1EM	L1EM	2X4 EDGE-LIT LED PANEL 120-277V UE - UNIVERSAL VOLTAGE	1	MANUFACTURER: LSI FIXTURE: SPF24-LED-50-UE-DIM-35 LED 5000 LUMENS, 3500K COLOR	EMERGENCY KITCHEN CEILING LIGHTS FURNISHED BY LICENSEE/ INSTALLED BY GC
		NOT USED	0		
L2	L2	2X2 EDGE-LIT LED PANEL (SURFACE MOUNT) 120-277V UE - UNIVERSAL VOLTAGE	2	MANUFACTURER: LSI FIXTURE: SPF24-LED-50-UE-DIM-35 LED 5000 LUMENS, 3500K COLOR	KITCHEN CEILING LIGHTS. FURNISHED BY LICENSEE / INSTALLED BY G.C.
L4	L4	UNIVERSAL MOUNT EXIT SIGN, LED LIGHTED, 120V WITH BATTERY PACK, 2 FACE, GREEN LETTER	2	JUNO, NAVILTE, NIBLHO THERMOPLASTIC EMERGENCY LIGHT	EXIT SIGN FURNISHED BY G.C./ INSTALLED BY GC
L6B	L6B	WALK-IN COOLER FLUORESCENT LIGHT, 120 V 48"	0	KASON FIXTURE: # 18180F00048	FURNISHED BY WIC VENDOR, INSTALLED BY G.C.
L19	L19	DOWN LIGHT, RECESSED IN CEILING	8	ELITE HOUSING: LD6IC-AT LED MODULE: ELITE LED LIGHTING RL607-14W-120-FL-27K-W-WH	FURNISHED BY LICENSEE/ INSTALLED BY GC
L19EM	L19 EM	EMERGENCY DOWN LIGHT, RECESSED IN CEILING	1	ELITE HOUSING: LD6IC-AT LED MODULE: ELITE LED LIGHTING RL607-14W-120-FL-30K-SN-SN	EMERGENCY RECESSED DOWN LIGHT - NORMALLY ON INVERTER UNIT - ISOLITE, IMI-12-LC-V1 FURNISHED BY LICENSEE/ INSTALLED BY GC
L6A	L6A	HOOD LIGHT	9	FURNISHED & INSTALLED BY EQUIPMENT SUPPLIER	LIGHTS SUPPLIED & PRE-WIRED BY HOOD VENDOR. ELECTRIC CONTRACTOR TO CONNECT MAIN WIRES TO SHUNT TRIP BREAKER AND HOOD CONTROL PANEL

EQUIPMENT SCHEDULE

[THIS INFORMATION WAS PROVIDED BY THE OWNER & THE CONTRACTOR SHALL VERIFY ALL ELECTRICAL REQUIREMENTS w/ EQUIPMENT VENDOR(S) PRIOR TO ROUGH-IN OF POWER. NOTIFY ARCHITECT OF ANY CONFLICTS WITH-IN 10 DAYS OF EQUIPMENT APPROVAL.]

ELECTRICAL					DESCRIPTION					
D DIRECT CONNECTION					P PANDA EXPRESS VENDOR			S SERVING AREA		
C CONVENIENT OUTLET					GC GENERAL CONTRACTOR			K KITCHEN		
FSO FLOOR STUB OUT					EC ELECTRICAL CONTRACTOR			(E) EXISTING		
DC DROPPED CORD					KEC KITCHEN EQUIPMENT COMPANY			(L) LICENSEE		
CONNECTION	LOAD	PHASE	H.P.	VOLTS	REMARKS	DIMENSIONS	MANUFACTURE	MODEL #	EQUIPMENT	NO.
R.I.H.	TYPE	WATT				W x D x H (ø x H)				
SERVING AREA EQUIPMENT										
					SEE DETAIL	SEE PLAN	KEC	CUSTOM	HOT WELLS COUNTER SERVICE	1B
					SEE DETAIL	SEE PLAN	KEC	CUSTOM	SNEEZE GUARD	1S2
REF. ELEC. D	840W	1		120	3 HEATING ELEMENTS	43.06" X 5.25" X 3.03"	KEC		43" RADIANT TOP HEATER	1S2b1
REF. ELEC. D	1100W	1		120	4 HEATING ELEMENTS	55.56" X 5.25" X 3.03"	KEC		56" RADIANT TOP HEATER (2)	1S2b2
REF. ELEC. D	15A	1		120	SEE DETAIL	SEE PLAN	KEC	CUSTOM	CASHIER & BEVERAGE COUNTER	2Q
REF. ELEC. C	650W	1		120	INDUCTION DRY WELL	15 3/4" DIA X 11"D	IO CONTROLS	IDW650L	INDUCTION WELL - 17QT	3F
REF. ELEC. C	650W	1		120	INDUCTION DRY WELL	12 1/2" DIA X 11"D	IO CONTROLS	IDW650S	INDUCTION WELL - 11QT	3G
REF. ELEC. C		1		120			COKE	CUSTOM	BOTTLE REFRIGERATOR	12B
KITCHEN EQUIPMENT										
					SEE DETAIL	124"x42"	KEC	CUSTOM	124" CHINESE RANGE (R)	20
24"	C		1		120		47"x31-1/2"x51-5/8"	FRYMASTER	FMJ350-PE	FRYER	21A
36"	DC	17.3A	1		208V	KH 6-50P	24"X27 7/8"X15 1/2"	VULCAN	VWCS-101	24" CLAMSHELL TOP W/ 24" GAS GRIDDLE	23C
							24"X31-1/2"X15 1/2"	VULCAN	MSA-24		
24"	C	14.8A	1		120	NEMA 5-15P	19.9"X34.5"X41.3"	WINSTON	HA4005	RICE HOLDING CABINET	24Hr
							19"ø x17"	RINNAI	RER-55AS	RICE COOKER	25A
24"	C	12A	1	1/2	115	NEMA 5-15P	36"X30"X29 3/4"	RANDELL	9802F-290MP-NSB	36" WORKTOP FREEZER	30Hn
24"	C	12A	1	1/2	120	NEMA 5-15P	84"x33"x35"	RANDELL	9050K-7MP2-NSB	84" REF. PREP. TABLE	34Aln
24"	C	9A	1		120	NEMA 5-15P	32"x33"x35"	RANDELL	9412-32-7MPL1-NSB	32" REF. PREP. TABLE	34Hn
							100"X30"	KEC	CUSTOM-(PS-100L)	POT SINK	40A
					2 COMPARTMENT	72"x30"	KEC	CUSTOM-(VS-72)	72" VEGETABLE SINK	41A
18GA POLISHED (WALL MTD. @ 59" A.F.F.)						SEE PLAN	KEC	CUSTOM (NSF)	12"D S.S. WALL MTD. SHELF	43A
18GA POLISHED (WALL MTD. @ 71" A.F.F.)						SEE PLAN	KEC	CUSTOM (NSF)	16"D S.S. WALL MTD. SHELF	43B
4 SHELVES MTD. @ 8" A.F.F., 26" A.F.F., 54" A.F.F., 72" A.F.F.						SEE PLAN	GOLD BOND	ISS	18"D WIRE SHELVES	44A
4 SHELVES MTD. @ 36" A.F.F., 48" A.F.F., 60" A.F.F., 72" A.F.F.						SEE PLAN	GOLD BOND	ISS	24"D WIRE SHELVES	44C
						24"x 30" x 24"	KEC	CUSTOM	S.S. RICE COOKER STAND	46A
						36 1/2"x 33" x 28"	KEC	CUSTOM	S.S. GRILL STAND	46K
50"	C	2.8A	1	1/3	120		12 1/2"x21"	PIPER	GSM-4	FOOD PROCESSOR	53
SMALL EQUIPMENT										
					W/TOWEL & SOAP	14 1/4"x18 1/2"	GSW	HS-1615NPASS	HAND SINK	45A
24"	C	105W	1		120	ON S.S. COUNTER	17" ø	WELBON	WRS-1088BS	RICE WARMER	54A
84"	DC	1800W	1		208	PLUG: NEMA 6-15R	17 1/2"X13 5/8"X22 9/16"	SHARP	R-CD1800M	MICROWAVE	55A
						AS REQUIRED BY LOCAL FIRE DEPT., CHECK LOCATION WITH PROJECT MANAGER				FIRE EXTINGUISHER	56
						SEE DETAIL	SAN-JAMAR	SANJT7500TBK		PAPER TOWEL DISPENSER	60D
					WALL MOUNT	12"x15"x78"	GRE	S-TIER		LOCKER (2)	61B
										SS LOW EQUIPMENT SCREEN WALL	B2M
POS EQUIPMENT										
					SEE ELEV. ON E-200	48" X 28" X 42"	GRE	CUSTOM	MANAGER STATION	49A
REF ELEV C	100W	1		120	SEE DETAIL			CUSTOM	COMPUTER	83A
REF ELEV C	50W	1		120	SEE PLAN				POS PRINTERS	86A
REF ELEV C	50W	1		120					FAX	87
REF ELEV C	500W	1		120	CUSTOM	11 1/4"x14 1/2"x9"	RESNOS	S 460	CASH REGISTER SYSTEM	94
MEP EQUIPMENT										
					SEE MECH. DWG.	SEE PLAN	CAPTIVE AIR	CUSTOM	EXHAUST HOOD	M1
					SEE MECH. DWG.	SEE PLAN	CAPTIVE AIR	CUSTOM	HOOD CONTROL PANEL	M4
					SEE MECH. DWG	SEE PLAN	CAPTIVE AIR		FIRE SUPPRESSION SYSTEM	M5
					SEE MECH/ELEC DWG	SEE PLAN			RECESSED ANSUL PULL BOX	M6
	D				FLOOR TYPE	24" X 24" X 13"	G.S.W. PHONE:1800-897-5999	SE2424FM	STAINLESS STEEL MOP SINK	P1
87"	C		1		120	SEE PLUMBING DWG	TANKLESS	RINNAI	SEE PLBG PLAN	TANKLESS WATER HEATER	P2
48"	C	50W	1		120	SEE PLAN	15" X 13"	DELL (17" COLOR)		LCD MONITOR-MANAGER	94-2-16
					SEE ELEC. DWG				EXISTING	ELECTRICAL PANEL	E7
SIGNAGE										
REF ELEV C	130W	1		120	DEDICATED CIRCUIT	48.9" X 28.1" X 1.3"	LG	55WS50BS-B	LCD DISPLAY MONITOR	96-3A
								SEE SIGN BOOK	LOCK-UP LOGO	S1
								SEE SIGN BOOK	LETTER SET SIGNAGE	S2
FURNITURE										
					SEE PLAN		CUSTOM - QUARTZ	URAL GRAY	SERVICE COUNTER	F1d
					SEE PLAN		CUSTOM - QUARTZ	URAL GRAY	BEVERAGE COUNTER	F2CR
MISC. EQUIPMENT										
									SANITIZER BUCKET SHELF	SS-01

PANDA RESTAURANT GROUP INC.
1683 Walnut Grove Ave.
Rosemead, California
91770
Telephone: 626.799.9898
Facsimile: 626.372.8288

All ideas, designs, arrangement and plans indicated or represented by this drawing are the property of Panda Express Inc. and were created for use on this specific project. None of these ideas, designs, arrangements or plans may be used by or disclosed to any person, firm, or corporation without the written permission of Panda Express Inc.

REVISIONS:

1	PLAN REVIEW COMMENTS	01/14/2022

ISSUE DATE:

1	95% SUBMITTAL	11/19/2021
2	100% SUBMITTAL	01/14/2022

DRAWN BY: JMJ

PANDA PROJECT #:
ARCH PROJECT #:

MARSHALL & BOLLWERK ENGINEERING, INC.
8881 Highway 92, Suite 400
Woodstock, Ga. 30189
p: (678) 795-0333, f: (678) 325-4559
e: mbe@mbeinc.net

GEORGIA REGISTERED No. 30016 PROFESSIONAL ENGINEER MICHAEL JONES 11-15-2021

PANDA EXPRESS

SPACE 8126
EXCHANGE FOOD COURT
FT LEONARD WOOD, MO

E-001

ELECTRICAL SCHEDULES

BID SET (NOT FOR CONSTRUCTION) DATE: 2022/01/18

1. VERIFY ALL HVAC & KITCHEN EQUIPMENT PRIOR TO ROUGH IN.
2. ALL TELEPHONE/DATA/TV CABLES AND WIRES TERMINATIONS; ALL REQUIRED CABLE; AND JACKS WILL BE INSTALLED BY THIRD PARTY.
3. POWER SUPPLY FOR COMPUTER, CASH REGISTER (83A, & 86A, OR 87, & 94) SHALL BE ON THE SAME CIRCUIT BREAKER, W/ ISOLATED GROUND & ORANGE RECEPTACLE.
4. ALL CIRCUITRY SHOWN WITHOUT TICKS SHALL HAVE (2) WIRES PLUS EQUIPMENT GROUNDING CONDUCTOR.
5. WHEN WORKING IN JURISDICTIONS WHICH HAVE ADOPTED THE 2008 NEC OR LATER, ALL MULTI-WIRE BRANCH CIRCUITS SHALL HAVE SEPARATE NEUTRALS TO MEET THE REQUIREMENTS OF 2008 NEC 210.4(B).

POWER PLAN GENERAL NOTES 2

NOT TO SCALE E-100

1. ALL CIRCUITRY/CONDUIT FOR FRONT LINE EQUIPMENT TO BE ROUTED IN CASEWORK TO J-BOX IN WALL AND CONCEALED IN WALL.
2. PROVIDE (2) 1" CONDUITS WITH PULL STRINGS FROM CASH REGISTER TO MANAGER STATION. SEE P.O.S. AND SERVICE LINE ELEVATIONS, SHEET 3/E-200.
3. SEE 'MANAGER STATION ELEVATION' 1 / E-200 FOR ADDITIONAL OUTLETS AND J-BOXES.
4. ANSUL PULL STATION. REFER TO DETAIL, SHEET 2 / E-400.
5. HOOD CONTROL PANEL/ANSUL SYSTEM CABINET. MOUNT CABINET DIRECTLY BELOW T-BAR CEILING.
6. PROVIDE 2-GANG J-BOX @ 48" AFF FOR HOOD CONTROL SWITCHES.
7. PROVIDE WP, IN-USE RED DOT (#CKSUV).
8. ALL DEVICES UNDER HOOD TO BE PROVIDED AND INSTALLED WITH SHUNT TRIP CIRCUIT BREAKER AND WATERPROOFING BOX (RED DOT #CKSUV). REFER TO COOKLINE ELECTRICAL ELEVATIONS, SHEET 6/E-200.
9. ELECTRIC GRILL '23C': FEED WITH 3 #8, #10 GROUND, 3/4" CONDUIT. PROVIDE A REMOTE GFI TRIP DEVICE IN ACCORDANCE w/ NEC 210.8 (B)(2). INSTALL IN AN ACCESSIBLE LOCATION IN THIS GENERAL AREA, OR AS DIRECTED BY THE OWNER, ARCHITECT OR ENGINEER. SEE DETAIL 2/E-200 FOR ADDITIONAL INFORMATION.
10. FURNISH AND INSTALL A HUBBELL GFSTBF20 FACELESS GFCI (OR EQUIVALENT) FOR CIRCUIT FEEDING EQUIPMENT BENEATH THE KITCHEN HOOD WHICH UTILIZE SINGLE 20A, 120V RECEPTACLES. INSTALL IN AN ACCESSIBLE LOCATION IN THIS GENERAL AREA, OR AS DIRECTED BY THE OWNER, ARCHITECT OR ENGINEER. PROVIDE ADDITIONAL OUTLETS AS REQUIRED TO FEED ALL SUCH LOADS BENEATH HOOD. FASTEN A PLASTIC LABEL STATING CIRCUIT AND EQUIPMENT SERVED FOR EACH OUTLET.
11. SEE 3/E-200 FOR SERVICE LINE ELEVATIONS.
12. CONNECT HEAT LAMPS TO COUNTER-MOUNTED SWITCH PROVIDED AND INSTALLED BY CONTRACTOR. REFER TO PLAN FOR LOCATIONS AND QUANTITIES.
13. PROVIDE DUPLEX RECEPTACLE FOR TANKLESS GAS WATER HEATER "P2" & SIMPLEX RECEPTACLE FOR HOT WATER CIRCULATION PUMP "CP". FIELD COORDINATE FINAL LOCATIONS OF RECEPTACLES w/ PLUMBING CONTRACTOR.

POWER PLAN KEYED NOTES 3

NOT TO SCALE E-100

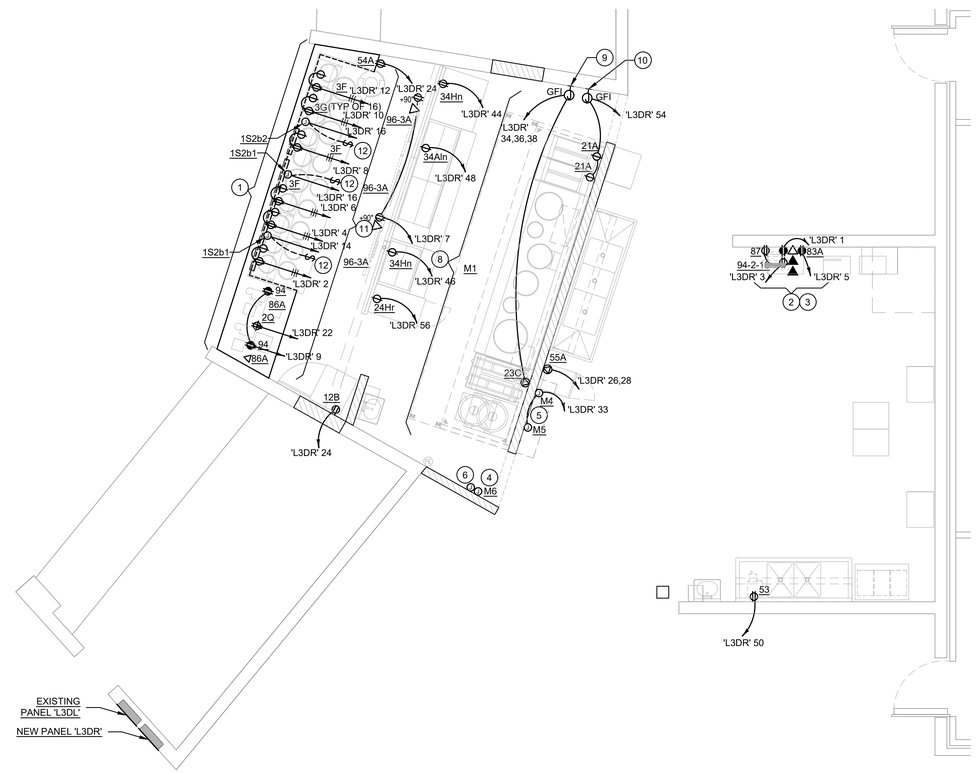

ALL SINGLE-PHASE RECEPTACLES RATED 150 VOLTS TO GROUND OR LESS, 50 AMPERES OR LESS AND THREE PHASE RECEPTACLES RATED 150 VOLTS TO GROUND OR LESS, 100 AMPERES OR LESS INSTALLED IN KITCHEN AREAS SHALL BE GROUND FAULT PROTECTED AS REQUIRED BY NEC 210.8 (B) (2).

NO UNDER SLAB ELECTRICAL WORK ALLOWED UNLESS OTHERWISE NOTED ON PLAN.

1 0' 2' 4' 8'

POWER FLOOR PLAN 1

Scale: 1/4"=1'-0" E-100

BID SET (NOT FOR CONSTRUCTION) DATE: 2022/01/18

PANDA RESTAURANT GROUP INC.
1683 Walnut Grove Ave.
Rosemead, California
91770
Telephone: 626.799.9898
Facsimile: 626.372.8288

All ideas, designs, arrangement and plans indicated or represented by this drawing are the property of Panda Express Inc. and were created for use on this specific project. None of these ideas, designs, arrangements or plans may be used by or disclosed to any person, firm, or corporation without the written permission of Panda Express Inc.

REVISIONS:

1	PLAN REVIEW COMMENTS	01/14/2022

ISSUE DATE:

1	95% SUBMITTAL	11/19/2021
2	100% SUBMITTAL	01/14/2022

DRAWN BY: JMJ

PANDA PROJECT #:

ARCH PROJECT #:

MARSHALL & BOLLWERK ENGINEERING, INC.
8681 Highway 92, Suite 400
Woodstock, Ga. 30189
p: (678) 795-0333, f: (678) 325-4559
e: mbe@mbeinc.net

GEORGIA REGISTERED No. 30016 PROFESSIONAL ENGINEER MICHAEL JONES 11-15-2021

PANDA EXPRESS

SPACE 8126
EXCHANGE FOOD COURT
FT LEONARD WOOD, MO

E-100

POWER FLOOR PLAN

NOTE:
CONTRACTOR TO INSTALL 3 GANG SWITCH BOX AS SHOWN BELOW. DO NOT INSTALL SEPARATE/INDIVIDUAL BOXES FOR EACH SWITCH

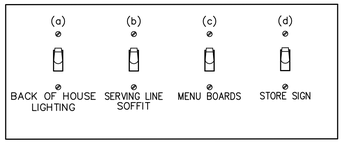

SWITCHBANK 'A' SCHEDULE

TAG	SWITCH TYPE	AREA SERVED / SWITCH LABEL	CIRCUIT	LOAD
a	TOGGLE SWITCH	BACK-OF-HOUSE	'L3DR' 40	550 VA
b	TOGGLE SWITCH	SERVING LINE SOFFIT	'L3DR' 40	173 VA
c	TOGGLE SWITCH	MENU, LED ACCENTS	'L3DR' 31	900 VA
d	TOGGLE SWITCH	STORE SIGN	'L3DR' 42	1,200 VA

LIGHTING SWITCHBANK SCHEDULE 4
NOT TO SCALE E-101

1. SWITCHBANK 'A'. REFER TO SCHEDULE THIS SHEET (4/ E-101).
2. ROUTE HOMERUN THROUGH LIGHTING SWITCHBANK 'A' (SWITCHES AS NOTED IN LOWER CASE). REFER TO SCHEDULE (4/E-101) FOR MORE INFORMATION.
3. ROUTE THROUGH CONTACTS IN HOOD CONTROL PANEL 'M4' FOR CIRCUIT POWER. REFER TO DETAILS, SHEETS 8 / E-400.
4. PROVIDE SEPARATE UN-SWITCHED HOT CONDUCTOR TO NIGHT LIGHT "NL" FIXTURES AND EMERGENCY FIXTURES. CONNECT TO EXISTING EMERGENCY LIGHTING CIRCUIT SERVING THIS AREA.
5. J-BOX FOR SIGNAGE. COORDINATE LOCATION WITH ARCHITECT / OWNER / SIGN PACKAGE. SIGN DISCONNECT PROVIDED BY SIGN CONTRACTOR.

(#) LIGHTING KEYED NOTES 3
NOT TO SCALE E-101

1. CONTRACTOR SHALL PROVIDE ALL REQUIRED HARDWARE, BRACKETS, ETC. FOR A COMPLETE INSTALLATION.
2. ALL LIGHTING FIXTURES SHALL BE SUPPORTED PER N.E.C. 410-16(C). SEE DETAIL, SHEET 1 / E-4.00.
3. CONTRACTOR SHALL INSTALL ALL LIGHTING FIXTURES INCLUDING OWNER-FURNISHED FIXTURES.
4. ALL FIXTURE BALLASTS/DRIVERS SHALL BE U.L. LISTED.
5. WHEN WORKING IN JURISDICTIONS WHICH HAVE ADOPTED THE 2008 NEC OR LATER, ALL MULTI-WIRE BRANCH CIRCUITS TO HAVE SEPARATE NEUTRALS TO MEET THE REQUIREMENTS OF 2008 NEC 210.4(B).
6. ALL CIRCUITRY SHOWN WITHOUT TICKS SHALL HAVE (2) WIRES PLUS EQUIPMENT GROUNDING CONDUCTOR.
7. 'N.L.' DESIGNATION INDICATES NIGHT LIGHT ON UN-SWITCHED CIRCUIT.

LIGHTING GENERAL NOTES 2
NOT TO SCALE E-101

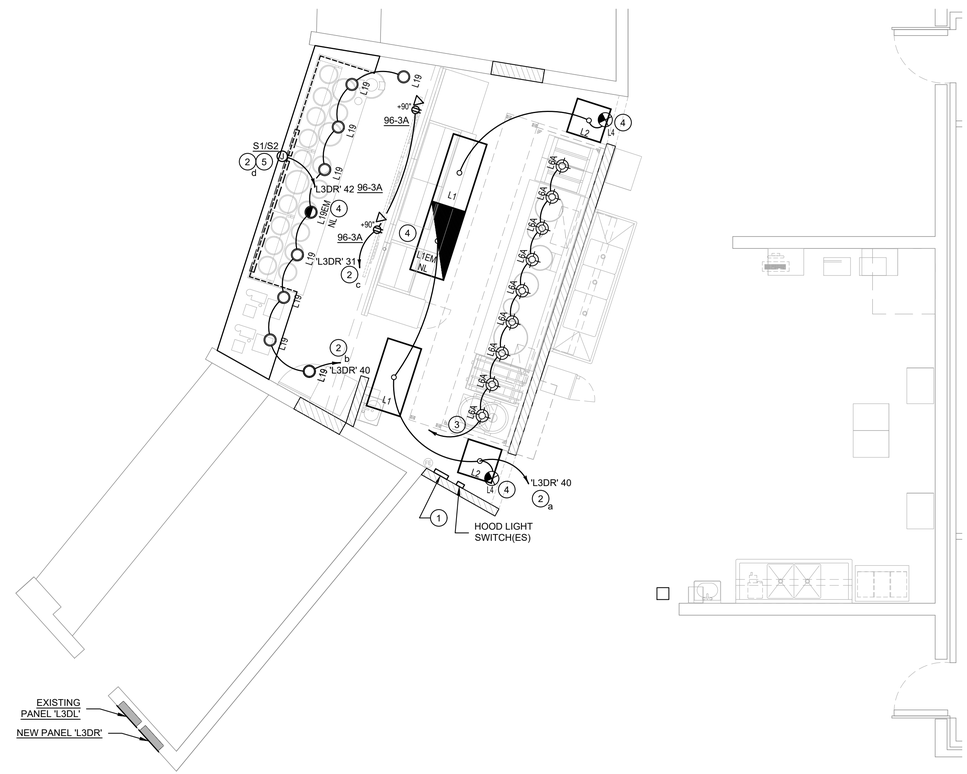

LIGHTING FLOOR PLAN 1
Scale: 1/4"=1'-0" E-101

PANDA RESTAURANT GROUP INC.
1683 Walnut Grove Ave.
Rosemead, California
91770
Telephone: 626.799.9898
Facsimile: 626.372.8288

All ideas, designs, arrangement and plans indicated or represented by this drawing are the property of Panda Express Inc. and were created for use on this specific project. None of these ideas, designs, arrangements or plans may be used by or disclosed to any person, firm, or corporation without the written permission of Panda Express Inc.

REVISIONS:

1	PLAN REVIEW COMMENTS	01/14/2022

ISSUE DATE:

1	95% SUBMITTAL	11/19/2021
2	100% SUBMITTAL	01/14/2022

DRAWN BY: JMJ

PANDA PROJECT #:
ARCH PROJECT #:

MARSHALL & BOLLWERK ENGINEERING, INC.
8681 Highway 92, Suite 400
Woodstock, Ga. 30189
p: (678) 795-0333, f: (678) 325-4559
e: mbe@mbeinc.net

GEORGIA REGISTERED No. 30016 PROFESSIONAL ENGINEER MICHAEL JONES 11-15-2021

PANDA EXPRESS
SPACE 8126
EXCHANGE FOOD COURT
FT LEONARD WOOD, MO

E-101
LIGHTING FLOOR PLAN

BID SET (NOT FOR CONSTRUCTION) DATE: 2022/01/18

ROOFTOP EQUIPMENT SCHEDULE

TAG	DESCRIPTION	kW	H.P.	FLA	VOLT/Ø	WIRE, CONDUIT	CONN.	MOUNT HEIGHT	DISC. SW. WITH RK1 FUSES PER MFR'S REQ'S. AND/OR REMARKS
CU-1	CONDENSING UNIT			21.4	208V.3Ø	3 #10, #10 GND., 3/4" C.		AT UNIT	30A. 3P. 3F. WP (1) (2) (3)
CU-2	CONDENSING UNIT			21.4	208V.3Ø	3 #10, #10 GND., 3/4" C.		AT UNIT	30A. 3P. 3F. WP (1) (2) (3)
MA-1	MAKE-UP AIR UNIT		3.0	10.2	208V.3Ø	3 #12, #12 GND., 3/4" C.		AT UNIT	30A. 3P. 3F. WP (1) (3)
EF-1	EXHAUST FAN		5.0	15.8	208V.3Ø	3 #10, #10 GND., 3/4" C.		AT UNIT	30A. 3P. 3F. WP (1) (3)

(1) DISCONNECT SWITCH PROVIDED WITH UNIT.

(2) COMBINATION 30A. 3P. 3F. WP DISCONNECT SWITCH WITH RK5 FUSES PER MANUFACTURER RECOMMENDATION.

(3) ELECTRICAL FEEDS ARE TO BE ROUTED FROM PLENUM SPACE, UP THROUGH EQUIPMENT CURB, INTO BOTTOM OF EQUIPMENT, THROUGH FACTORY INSTALLED WATER TIGHT CONNECTIONS.

HVAC EQUIPMENT SCHEDULE 4

NOT TO SCALE E-104

1. STUB ELECTRICAL FEED FOR EF-1, THROUGH ROOF ON HINGE SIDE OF EXHAUST FAN. IN LOCATION AS SHOWN ON POWER ROOF PLAN. REFER TO DETAIL 3/M-500 FOR ADDITIONAL DETAILS.
2. CIRCUIT FEEDS FROM PANELBOARD - THROUGH HOOD CONTROL PANEL - UP TO ROOF. REFER TO DETAIL, SHEET 8 / E-400 & KITCHEN HOOD SUBMITTAL DATA.
3. FEED THROUGH FACTORY THRU BASE CONNECTION AREA. COORDINATE WITH MECHANICAL.

(#) ROOF PLAN KEYED NOTES 3

NOT TO SCALE E-104

1. ALL ROOF MOUNTED EQUIPMENT SHALL BE IN NEMA-3R ENCLOSURES.
2. ALL CONDUIT RUNS SHOWN ON THE ROOF SHALL BE RUN BELOW THE ROOF IN THE CEILING SPACE WHERE AMBIENT TEMPERATURE WILL BE BELOW 30° C. FINAL CONNECTIONS TO THE ROOF EQUIPMENT IS LIMITED TO 5'-0' OF DIRECT SOLAR EXPOSURE.
3. G.C. COORDINATE ELECTRICAL, MECHANICAL, FIRE ALARM (IF REQUIRED) FOR INTERLOCK SEQUENCE.
4. VERIFY ALL FUSE SIZES AND TYPES WITH THE EQUIPMENT MANUFACTURER PRIOR TO INSTALLATION.

ROOF PLAN GENERAL NOTES 2

NOT TO SCALE E-104

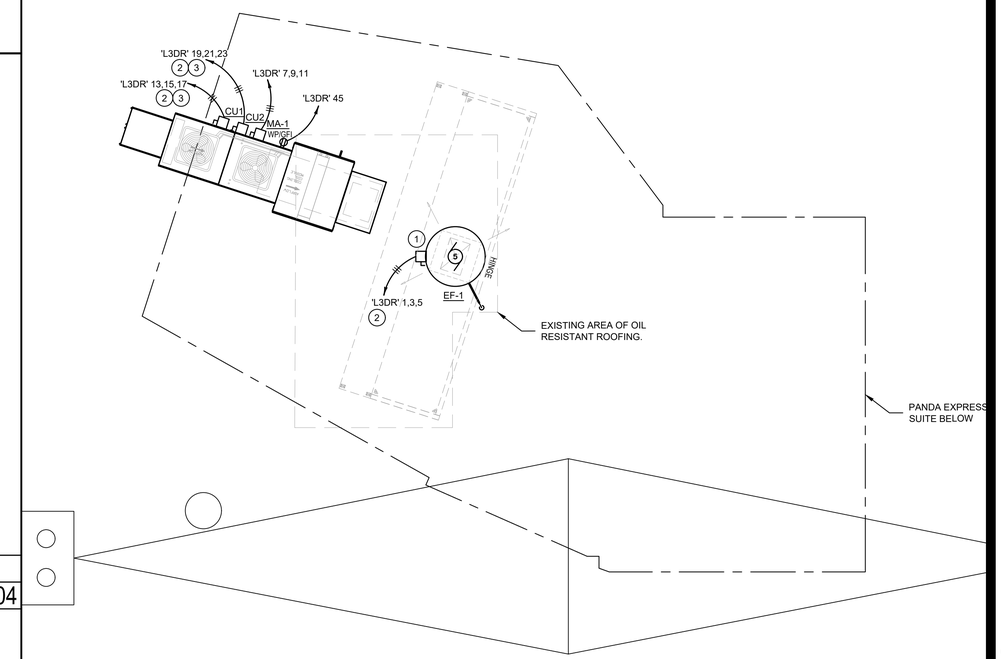

(1) 0' 2' 4' 8'

ROOF POWER PLAN 1

Scale: 1/4"=1'-0" E-104

PANDA EXPRESS CHINESE KITCHEN

PANDA RESTAURANT GROUP INC.
1683 Walnut Grove Ave.
Rosemead, California
91770
Telephone: 626.799.9898
Facsimile: 626.372.8288

All ideas, designs, arrangement and plans indicated or represented by this drawing are the property of Panda Express Inc. and were created for use on this specific project. None of these ideas, designs, arrangements or plans may be used by or disclosed to any person, firm, or corporation without the written permission of Panda Express Inc.

REVISIONS:

1	PLAN REVIEW COMMENTS	01/14/2022

ISSUE DATE:

1	95% SUBMITTAL	11/19/2021
2	100% SUBMITTAL	01/14/2022

DRAWN BY: JMJ

PANDA PROJECT #:

ARCH PROJECT #:

MARSHALL & BOLLWERK ENGINEERING, INC.
8661 Highway 92, Suite 400
Woodstock, Ga. 30189
p: (678) 795-0333, f: (678) 325-4559
e: mbe@mbeinc.net

GEORGIA REGISTERED No. 30016 PROFESSIONAL ENGINEER MICHAEL JONES 11-15-2021

BID SET (NOT FOR CONSTRUCTION) DATE: 2022/01/18

PANDA EXPRESS

SPACE 8126
EXCHANGE FOOD COURT
FT LEONARD WOOD, MO

E-104

ROOF POWER PLAN

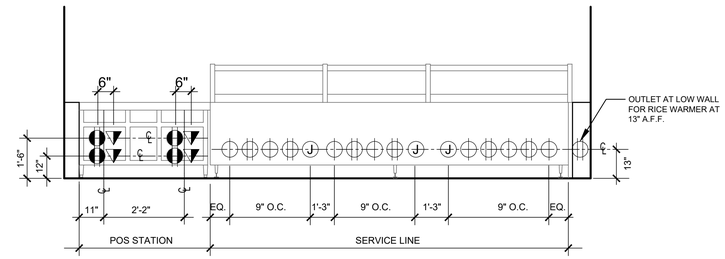

P.O.S. & SERVICE LINE ELEVATION 3

NOT TO SCALE E-200

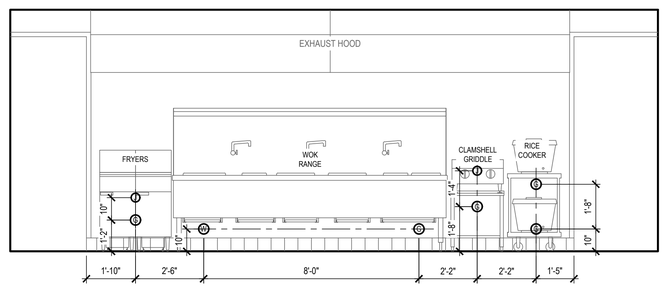

COOKLINE ELECTRICAL ELEVATIONS 4

NOT TO SCALE E-200

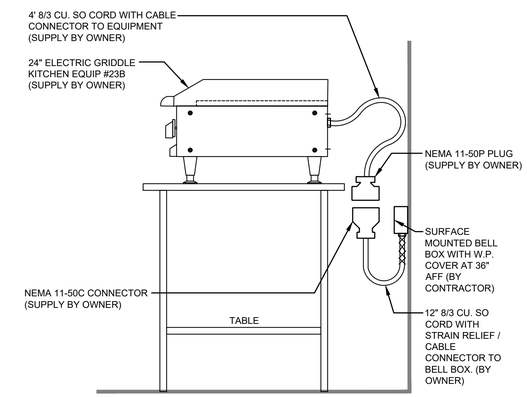

DETAIL AT ELECTRIC GRIDDLE (23B) 2

NOT TO SCALE E-200

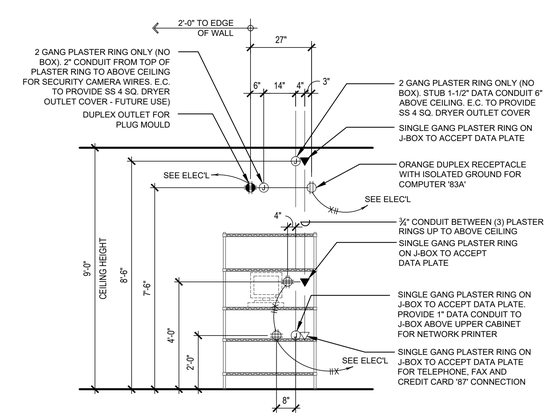

MANAGER STATION ELEVATIONS 1

NOT TO SCALE E-200

PANDA EXPRESS CHINESE KITCHEN

PANDA RESTAURANT GROUP INC.
1683 Walnut Grove Ave.
Rosemead, California
91770
Telephone: 626.799.9898
Facsimile: 626.372.8288

All ideas, designs, arrangement and plans indicated or represented by this drawing are the property of Panda Express Inc. and were created for use on this specific project. None of these ideas, designs, arrangements or plans may be used by or disclosed to any person, firm, or corporation without the written permission of Panda Express Inc.

REVISIONS:

1	PLAN REVIEW COMMENTS	01/14/2022

ISSUE DATE:

1	95% SUBMITTAL	11/19/2021
2	100% SUBMITTAL	01/14/2022

DRAWN BY: JMJ

PANDA PROJECT #:

ARCH PROJECT #:

MARSHALL & BOLLWERK ENGINEERING, INC.
8681 Highway 92, Suite 400
Woodstock, Ga. 30189
p: (678) 795-0333, f: (678) 325-4559
e: mbe@mbeinc.net

GEORGIA REGISTERED NO. 20016 PROFESSIONAL ENGINEER MICHAEL JONES 11-15-2021

BID SET (NOT FOR CONSTRUCTION) DATE: 2022/01/18

PANDA EXPRESS

SPACE 8126
EXCHANGE FOOD COURT
FT LEONARD WOOD, MO

E-200

ELECTRICAL ELEVATIONS

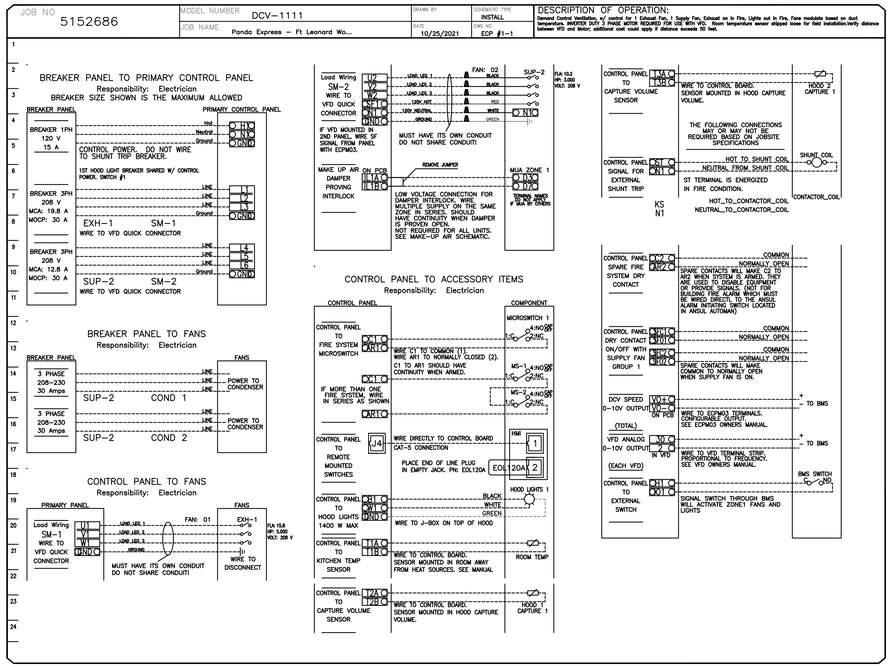

KITCHEN EXHAUST SYSTEM DIAGRAM | 8
NOT TO SCALE | E-400

NOT USED | 7
NOT TO SCALE | E-400

NOT USED | 6
NOT TO SCALE | E-400

NOT USED | 5
NOT TO SCALE | E-400

NOT USED | 4
NOT TO SCALE | E-400

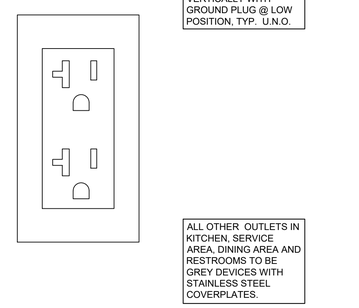

RECEPT. DIAGRAM | 3
NOT TO SCALE | E-400

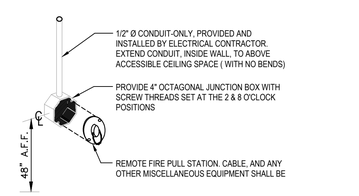

ANSUL PULL STATION DETAIL | 2
NOT TO SCALE | E-400

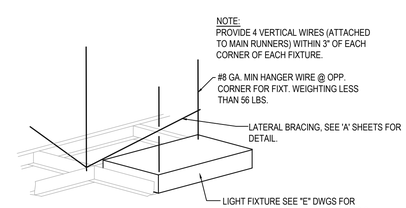

LIGHT FIXTURE DETAIL | 1
NOT TO SCALE | E-400

BID SET (NOT FOR CONSTRUCTION) DATE: 2022/01/18

PANDA EXPRESS CHINESE KITCHEN

PANDA RESTAURANT GROUP INC.
1683 Walnut Grove Ave.
Rosemead, California
91770
Telephone: 626.799.9898
Facsimile: 626.372.8288

All ideas, designs, arrangement and plans indicated or represented by this drawing are the property of Panda Express Inc. and were created for use on this specific project. None of these ideas, designs, arrangements or plans may be used by or disclosed to any person, firm, or corporation without the written permission of Panda Express Inc.

REVISIONS:

1	PLAN REVIEW COMMENTS	01/14/2022

ISSUE DATE:

1	95% SUBMITTAL	11/19/2021
2	100% SUBMITTAL	01/14/2022

DRAWN BY: JMJ

PANDA PROJECT #:

ARCH PROJECT #:

MARSHALL & BOLLWERK ENGINEERING, INC.
8881 Highway 92, Suite 400
Woodstock, Ga. 30188
p: (678) 795-0333, f: (678) 325-4559
e: mbe@mbeinc.net

GEORGIA REGISTERED No. 30016 PROFESSIONAL ENGINEER MICHAEL JONES 11-15-2021

PANDA EXPRESS

SPACE 8126
EXCHANGE FOOD COURT
FT LEONARD WOOD, MO

E-400

ELECTRICAL DETAILS, DIAGRAMS

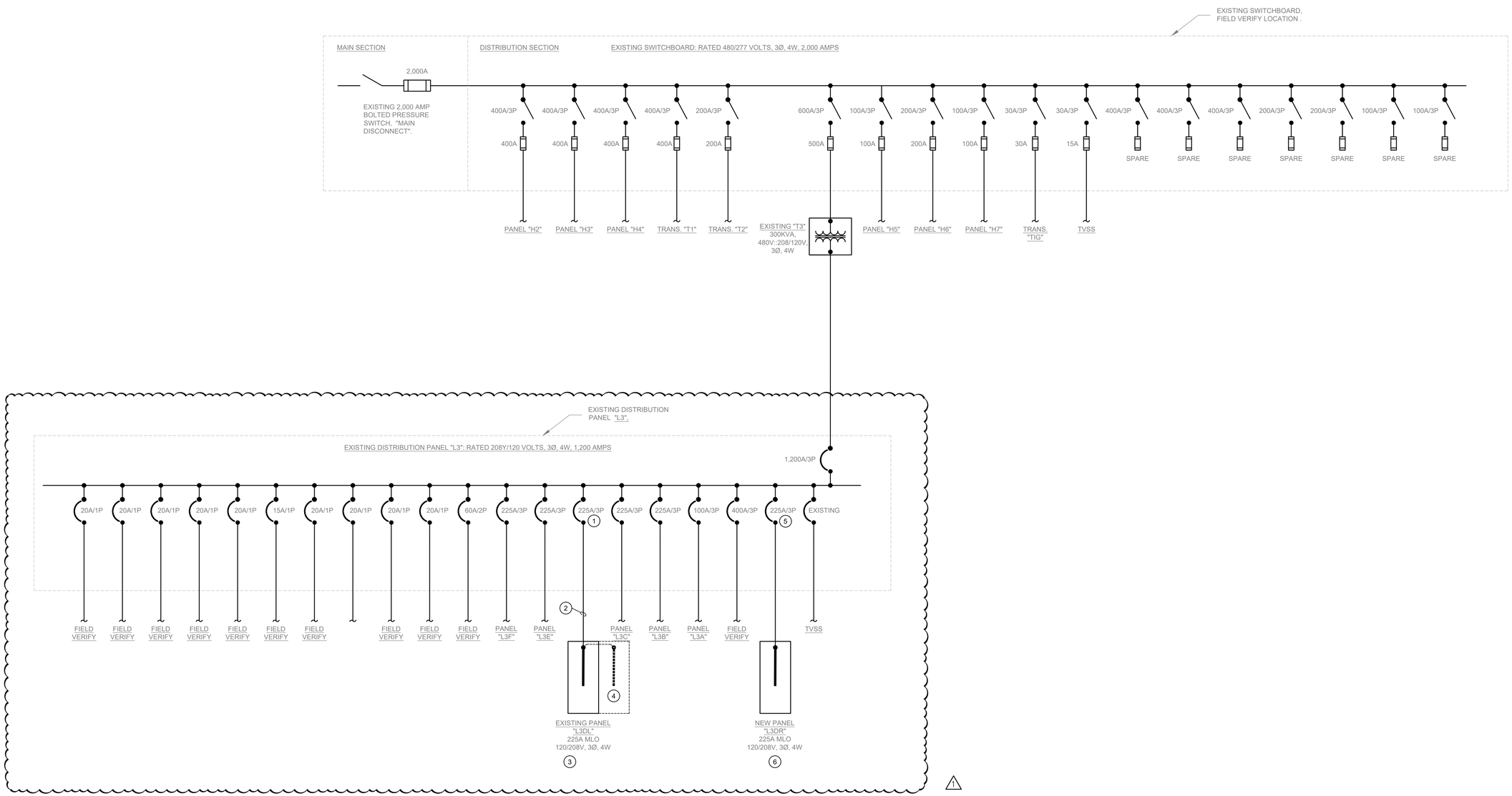

1

EXISTING SINGLE LINE DIAGRAM | 1

NOT TO SCALE | E-600

1. THE CONTRACTOR SHALL FIELD VERIFY ACTUAL CONDITIONS TO LOCATE WHERE THE DISTRIBUTION & SUB PANELS SERVING THE PANDA EXPRESS SUITE ARE SERVED FROM AND EXISTING FEEDER & BREAKER SIZES IN THE DISTRIBUTION PANELPRIOR TO THE START OF WORK.
2. ALL PANELBOARDS ARE EXISTING TO REMAIN, UNO.
3. ALL WIRE #8 AND SMALLER TO BE THWN/THHN CU.; #6 AND LARGER TO BE XHHW CU.
4. UNLESS NOTED, ALL DEVICES AND TERMINATIONS 100 AMPS AND LESS TO BE RATED FOR 60°C WIRE, OVER 100 AMPS, 75°C WIRE.
5. THE CONTRACTOR SHALL TAKE A MINIMUM OF A SEVEN DAY, OR AS DIRECTED BY BASE CIVIL ENGINEERING, LOAD HISTORY RECORDING TO DETERMINE THE PEAK LOAD ON THE EXISTING 480V SWITCHBOARD AND DISTRIBUTION PANEL "L3" PRIOR TO THE START OF ANY CONSTRUCTION ON THE NEW SUITE. A SUMMARY OF THE PEAK LOADING OF THE PANELS SHALL BE PROVIDED TO THE BASE ELECTRICAL ENGINEER & THE ENGINEER OF RECORD (EOR) FOR REVIEW TO DETERMINE IF THE PANELS HAVE THE CAPACITY TO SERVE THE PROJECT.
6. SEE SHEET 2/E-601 FOR THE CALCULATED LOAD SUMMARY FOR PANEL "L3DR" AND NOTIFY THE EOR OF ANY DISCREPANCIES.

SINGLE LINE DIAGRAM GENERAL NOTES | 3

NOT TO SCALE | E-600

1

1. EXISTING 225A/3P BREAKER IN PANEL "L3".
2. EXISTING 4 #4/0, 1 #4G., 2 1/2" C.
3. EXISTING PANEL "L3DL" 225 AMP MLO PANEL w/ FEED-THRU LUGS.
4. DISCONNECT EXISTING PANEL "L3DR" FROM PANEL "L3DL", REMOVE ALL EXISTING BRANCH CIRCUITS SERVED FROM PANEL "L3DR", & REMOVE THE PANEL.
5. PROVIDE A NEW 225A/3P BREAKER OF THE SAME FRAME SIZE, TYPE, & AIC RATING AT THE ADJACENT EXISTING BREAKER.
6. NEW PANEL "L3DR" SHALL BE FURNISHED & INSTALLED BY THE CONTRACTOR. PROVIDE NEW 4 #4/0, 1 #4G., 2 1/2" C. CONNECTION FROM PANEL "L3". SEE PANEL SCHEDULE ON SHEET E601 FOR ADDITIONAL INFORMATION.

(#) SINGLE LINE DIAGRAM KEYED NOTES | 2

NOT TO SCALE | E-600

PANDA RESTAURANT GROUP INC.
1683 Walnut Grove Ave.
Rosemead, California
91770
Telephone: 626.799.9898
Facsimile: 626.372.8288

All ideas, designs, arrangement and plans indicated or represented by this drawing are the property of Panda Express Inc. and were created for use on this specific project. None of these ideas, designs, arrangements or plans may be used by or disclosed to any person, firm, or corporation without the written permission of Panda Express Inc.

REVISIONS:

1	PLAN REVIEW COMMENTS	01/14/2022

ISSUE DATE:

1	95% SUBMITTAL	11/19/2021
2	100% SUBMITTAL	01/14/2022

DRAWN BY: JMJ

PANDA PROJECT #:

ARCH PROJECT #:

MARSHALL & BOLLWERK ENGINEERING, INC.
8681 Highway 92, Suite 400
Woodstock, Ga. 30189
p: (678) 795-0333, f: (678) 325-4559
e: mbe@mbeinc.net

GEORGIA REGISTERED No. 30016 PROFESSIONAL ENGINEER MICHAEL JONES 11-15-2021

BID SET (NOT FOR CONSTRUCTION) DATE: 2022/01/18

PANDA EXPRESS

SPACE 8126
EXCHANGE FOOD COURT
FT LEONARD WOOD, MO

E-600

EXISTING SINGLE LINE DIAGRAM & NOTES

PANEL "L3DR" **(NEW)** — PANELBOARD

MOUNTING: FLUSH
LOCATION: FOOD COURT
TYPE: BOLT ON BKRS. w/ GROUND BUS
NEMA RATING: 1

PROVIDE AN ARC FLASH WARNING SIGN PER NEC 110.16.

208Y/120V, 3ϕ, 4W
225A MLO
RATED 10 k A.I.C.
GROUND BUS

	BRKR	DESCRIPTION	WIRE	BKR	PL	kVA A	kVA B	kVA C	PL	BKR	WIRE	DESCRIPTION	BRKR	
	1					1.90 1.30			1	20	10	INDUCTION DRY WELL 3G-GFI	2	1
	3	HOOD EXHAUST FAN - "EF1"	12	20	3		1.90 1.30		1	20	10	INDUCTION DRY WELL 3G-GFI	4	1
	5							1.90 1.30	1	20	10	INDUCTION DRY WELL 3G-GFI	6	1
	7					1.22 1.95			1	20	10	INDUCTION DRY WELL 3F, 3G-GFI	8	1
	9	MAKE-UP AIR UNIT - "MA-1"	12	15	3		1.22 1.30		1	20	10	INDUCTION DRY WELL 3F, 3G-GFI	10	1
	11							1.22 1.30	1	20	10	INDUCTION DRY WELL 3G-GFI	12	1
	13					2.09 0.84			1	20	12	RADIANT TOP HEATER "1S2B1"- GFI	14	1
	15	CONDENSING UNIT - "CU1"	10	30	3		2.09 0.84		1	20	12	RADIANT TOP HEATER "1S2B1"- GFI	16	1
	17							2.09 1.10	1	20	12	RADIANT TOP HEATER "1S2B2"- GFI	18	1
	19					2.09 0.65			1	20	12	BOTTLE REFRIGERATOR "12B"	20	1
	21	CONDENSING UNIT - "CU2"	10	30	3		2.09 1.80		1	20	12	SERVING COUNTER "2C"	22	1
	23							2.09 0.18	1	20	12	RICE WARMER "54A"	24	1
IG	25	FAX "87", MGR STA "49A"	12	20	1	0.72 0.90			2	15	12	MICROWAVE - 55A- GFI	26	1
	27	VCR MONITOR "92-2-16"	12	20	1		0.36 0.90						28	
IG	29	COMP "83A", MGR STA "49A"	12	20	1			0.18 1.20	1	20	12	WATER HTR "P2" & "CP"	30	
*	31	MENU BOARDS - RECEPS "96-3A"	12	20	1	0.54 0.00			-	-	-	(SHUNT TRIP)	32	
IG	33	SER. AREA POS'S 94, PTRS "86A"	12	20	1		0.36 1.80		2	30	10	24" ELECTRIC GRIDDLE - "23C"	34	■ 1
	35	FAX "87", MGR STA "49A"	12	20	1			0.72 1.80					36	
	37	VCR MONITOR "92-2-16"	12	20	1	0.36 0.00			1	20	-	SPARE	38	
	39	COMP "83A", MGR STA "49A"	12	20	1		0.18 0.72		1	20	12	LIGHTS	40	*
	41	MENU BOARDS - RECEPS "96-3A"	12	20	1			0.54 1.20	1	20	12	LOGO "S2" I.D. SIGN "S1"	42	*
	43	SER. AREA POS'S 94, PTRS "86A"	12	20	1	0.36 1.44			1	20	12	REF. PREP TABLE "34Ah"- GFI	44	1
	45	RECEPT. - ROOF	12	20	1		1.50 1.44		1	20	12	REF. PREP TABLE "34Hh"- GFI	46	1
	47	HOOD/ANSUL CONT PNL "M4" & "M5"	12	20	1			1.00 1.08	1	20	12	WORKTOP FRZR "30Hh"- GFI	48	1
	49	SPARE	-	20	1	0.00 0.34			1	20	12	FOOD PROCESSOR "53"	50	1
	51	SPARE	-	20	1		0.00 0.00		-	-	-	(SHUNT TRIP)	52	■ 1
	53	SPARE	-	20	1			0.00 1.20	1	20	12	FRY. CONTROL "21A"	54	
	55	SPACE	-	-	1	0.00 1.78			1	20	12	RICE HOLDING CABINET "24Hr"- GFI	56	1
	57	SPACE	-	-	1		0.00 0.00		1	20	-	SPARE	58	
	59	SPACE	-	-	1			0.00 0.00	1	20	-	SPARE	60	
					TOTAL	18.47	19.80	20.10	kVA					
						154	165	167	AMPS					
	PER NEC ARTICLE 220		TOTAL FEEDER LOAD			49	kVA	136	AMPS					

NOTES: FURNISH w/ FEED-THRU LUGS (IF 2 SECTION PANEL IS PROVIDED), ISOLATED GROUND, & SOLID GROUND BUS.
- * LOAD SHOWN IS ADJUSTED BY 125% PER NEC IN THE FEEDER LOAD CALCULATION.
- ■ PROVIDE SHUNT TRIP TYPE CIRCUIT BREAKER.
- IG PROVIDE ISOLATED GROUND CONDUCTOR WITH THIS CIRCUIT.
- GFI PROVIDE A GFI TYPE CIRCUIT BREAKER.
- 1 KITCHEN LOAD SHOWN IS ADJUSTED BY 65% PER NEC IN THE FEEDER LOAD CALCULATION.
- 2 LOAD IS NON-SIMULTANEOUS TO OTHER KITCHEN EQUIPMENT AND IS NOT FIGURED IN FEEDER LOAD TOTALS.

1

PANEL SCHEDULES 1

NOT TO SCALE E-601

1

PANEL "L3DR" LOAD CALCULATION SUMMARY

CONNECTED KVA	TOTAL KVA	DEMAND FACTOR	ESTIMATED DEMAND
RECEPTACLES	6.94	1 x1st 10k+0.5x>10k (Per NEC220.44)	6.94
KITCHEN	26.53	0.65 (Per NEC220.56)	17.24
LIGHTING	3.00	1.00	3.00
HVAC	12.53	1.00	12.53
REFRIGERATION	0.00	1.00	0.00
MOTOR	9.36	1.00	9.36
LARGEST MOTOR	0.00	0.25	0.00
HEAT	0.00	1.00	0.00
TOTALS	58.36	-	49.07 KVA / 136.32 AMPS

1

NEW CONNECTED LOAD SUMMARY 2

NOT TO SCALE E-601

PANDA RESTAURANT GROUP INC.
1683 Walnut Grove Ave.
Rosemead, California
91770
Telephone: 626.799.9898
Facsimile: 626.372.8288

All ideas, designs, arrangement and plans indicated or represented by this drawing are the property of Panda Express Inc. and were created for use on this specific project. None of these ideas, designs, arrangements or plans may be used by or disclosed to any person, firm, or corporation without the written permission of Panda Express Inc.

REVISIONS:

1	PLAN REVIEW COMMENTS	01/14/2022

ISSUE DATE:

1	95% SUBMITTAL	11/19/2021
2	100% SUBMITTAL	01/14/2022

DRAWN BY: JMJ

PANDA PROJECT #:
ARCH PROJECT #:

MARSHALL & BOLLWERK ENGINEERING, INC.
8881 Highway 92, Suite 400
Woodstock, Ga. 30189
p: (678) 798-0333, f: (678) 325-4559
e: mbe@mbeinc.net

GEORGIA REGISTERED NO. 20016 PROFESSIONAL ENGINEER MICHAEL JONES 11-15-2021

BID SET (NOT FOR CONSTRUCTION) DATE: 2022/01/18

PANDA EXPRESS
SPACE 8126
EXCHANGE FOOD COURT
FT LEONARD WOOD, MO

E-601

PANEL SCHEDULES & LOAD CALC'S